AUTOMATIC SCREW FEEDER

HAMMER
AUTOMATIONSTECHNIK
BEI DEN EICHEN 16
72227 EGENHAUSEN
TEL. 07453/8108 FAX1774

Quicher

Quicher
Precision Screw Feeder

NJR Series

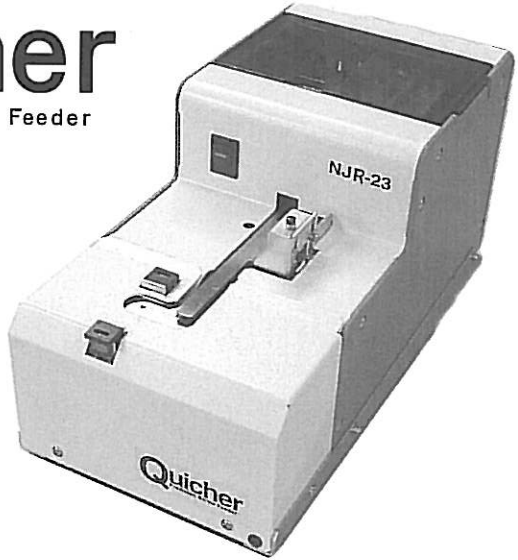

Instructions

Before using the Quicher, thoroughly read this manual.

Contents

1. Before Use 1
2. Operating Precautions 1
3. Component Names 3
4. Pre-operational Checks and Adjustments 4
5. Operating Procedures and Operational Checks 10
6. Maintenance 13
7. Troubleshooting Guide 20
8. Main Specifications 23
9. Warranty 24

1. Before Use

Thank you for purchasing the Quicher NJR Series Automatic Screw Feeder.

Before using the Quicher, make sure that the following accessories are supplied with the machine.

Accessories Instruction manual × 1 AC adapter × 1 Allen wrench × 1 Screwdriver × 1

To obtain optimum performance from the Quicher, it is essential that you thoroughly read this manual.

2. Operating Precautions

Installation site

CAUTION Install the Quicher at a level, steady place.
If you install the Quicher in an unstable location, it may topple or fall, causing personal injury.

CAUTION Do not operate the Quicher in places where a flammable or explosive gas exists or the humidity is high.
Using the Quicher in such places will create a safety hazard.

When shutting down the Quicher at day's end or leaving it unused for long periods of time

CAUTION When shutting down the Quicher at day's end or leaving it unused for long periods of time, disconnect its AC adapter from the power outlet.

AC adapter

CAUTION Use the accessory AC adapter only.

Rail

Do not scratch the rail. Do not apply any oil or grease to the rail.

Unusable screws

Use the specified screws only. Avoid using screws to which oil, grease, dirt, or other foreign matter is attached.

Screw removal precautions

When removing screws, exercise care not to apply any undue force or shock to them.

Avoid inserting foreign objects

CAUTION Do not position your fingers or foreign objects in the screw bin, holes, or other open spaces because you may be injured.
Be sure that no inappropriate screws or foreign objects are allowed to enter the Quicher.

Abnormalities during operation

CAUTION If any abnormality occurs during operation, turn off the power switch and disconnect the AC adapter from the power outlet.
If you continue to use the Quicher while it is acting abnormally, a risk of fire, electric shock, or personal injury may be caused. If you encounter any abnormality, contact your local dealer.

Avoid making and attempt to repair, disassemble, or modify the Quicher

CAUTION When the Quicher is in need of repair, contact your local dealer.

3. Component Names

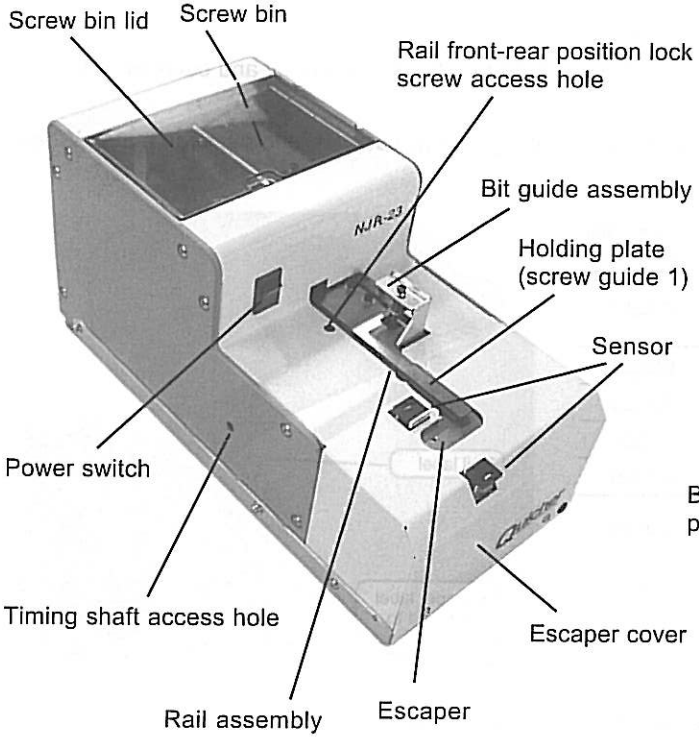

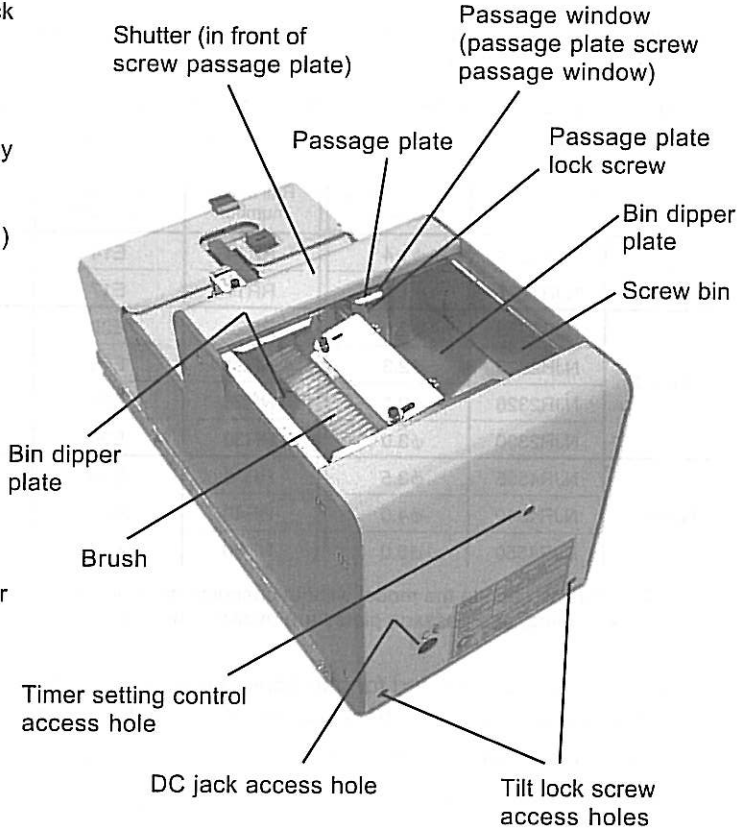

4. Pre-operational Checks and Adjustments

4-1 Confirming the Quicher Model Number

Before using the Quicher, verify that the model matches the screw size to be used.

To confirm the model number, remove the escaper cover and note the labels attached to the rail assembly and escaper. The identification label marking is in R** form.

The Quicher can be converted to accept a different screw size by replacing the rail assembly, escaper, and passage plate. When you replace component parts, verify the employed screw size.

Type	Model number	Screw nominal diameter	Rail model number	Escaper model number	Passage plate model number
NJR12	NJR1214	ϕ1.4	RR14	E14	W1217
	NJR1217	ϕ1.7	RR17	E17	
NJR23	NJR2320	ϕ2.0	RR20	E20	W2320
	NJR2323	ϕ2.3	RR23	E23	W2323
	NJR2326	ϕ2.6	RR26	E26	W2326
	NJR2330	ϕ3.0	RR30	E30	W2330
NJR45	NJR4535	ϕ3.5	RR35	E35	W4540
	NJR4540	ϕ4.0	RR40	E40	
	NJR4550	ϕ5.0	RR50	E50	W4550

NOTE: You can change the model without changing the type. Replacement rails, escapers, and passage plates are available as options.

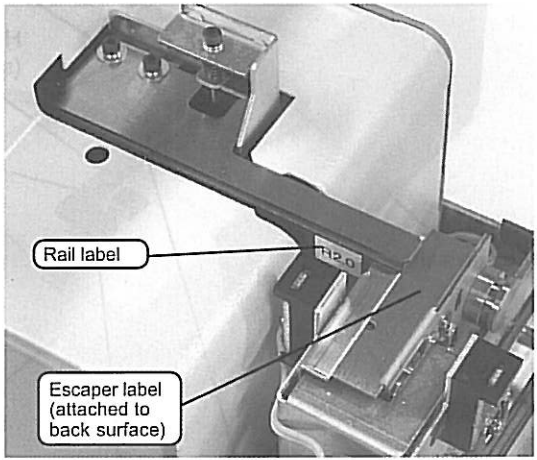

The Quicher is factory adjusted for pan-head screws prior to shipment. If readjustments are needed to match the employed screw, complete the following check/adjustment procedures before using the Quicher.

- Checking and adjusting the brush
- Checking and adjusting the passage plate
- Checking and adjusting the holding plate (screw guide 1)
- Checking and adjusting the rail assembly and escaper components

CAUTION Before performing any check/adjustment procedure, turn off the power switch.

4-2 Checking and Adjusting the Brush

Check the height of the brush. Ensure that the brush check/adjustment procedure is completed while the brush is placed in a horizontal position as shown at right. To place the brush in a horizontal position, rotate the timing shaft with the accessory Allen wrench.

Have on hand the screws to be used. Drop a few of them into the rail groove, and check and adjust the brush height as directed below.

After the brush is placed in a horizontal position as shown below, rotate the brush. When the resultant gap between the brush center end and employed screw heads is approximately 0 mm, no adjustments are needed.

If any adjustments are needed, perform the following procedure.

Loosen the brush mounting screws.

Make adjustments so that the gap between the brush center end and employed screw heads is approximately 0 mm. In this instance, avoid lowering the brush to excess. After completion of adjustments, tighten the brush mounting screws.

As far as the brush is properly leveled, the front-rear V-groove in the screw bin upper end is in alignment with the rail upper surface prevailing when the brush is in an upright position.

After the brush is properly adjusted, rotate it again to verify that it smoothly moves without exhibiting resistance.

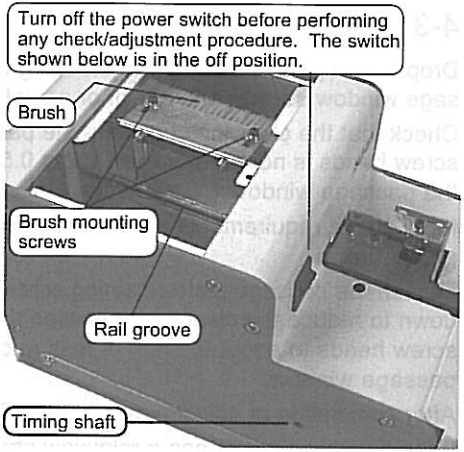

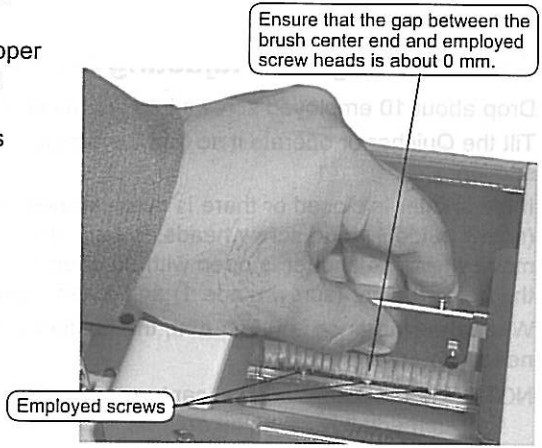

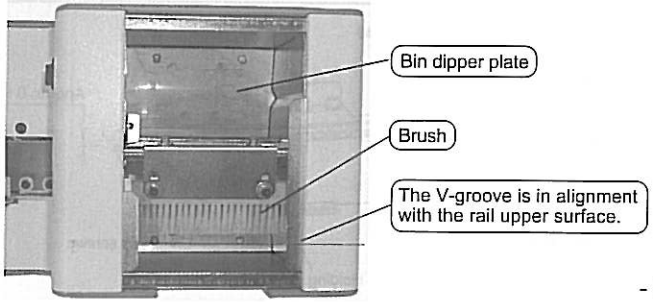

4-3 Checking and Adjusting the Passage Plate

Drop the employed screws into the rail groove. Slide the screws to the passage window section and check or adjust the passage plate height.

Check that the clearance between the passage window upper end and the screw heads is not greater than about 0.5 mm and that the screws can pass the passage window.

If the above requirements are not met, perform the following adjustment procedure.

Loosen the passage plate retaining screw. Move the passage plate up or down to reduce the clearance between the passage window upper end and screw heads to about 0.5 mm or less and permit the screws to pass the passage window.

After completion of adjustments, tighten the passage plate retaining screw.

If the employed screw has a relatively short shank, fine adjustments are needed. For screws having a relatively long shank, however, coarse adjustments will suffice.

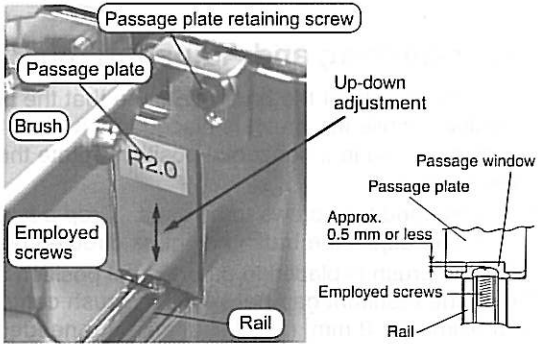

4-4 Checking and Adjusting the Holding Plate (Screw Guide 1)

Drop about 10 employed screws into the rail groove.

Tilt the Quicher or operate it so that the screws are shifted to the escaper section.

If the shutter is closed or there is no clearance between the holding plate (screw guide 1) and screw heads, the screws cannot move. The screws can move when the shutter is open with an adequate clearance provided between the holding plate (screw guide 1) and screw heads.

When the clearance is 0 to 1 mm, the holding plate (screw guide 1) height needs no adjustment.

NOTE: If the escaper section captures a screw and brings the Quicher to a stop immediately after you operate it, adjust the timer setting control on the rear of the unit.

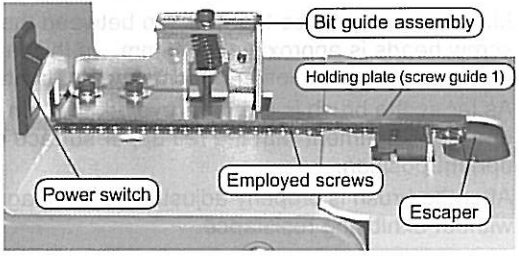

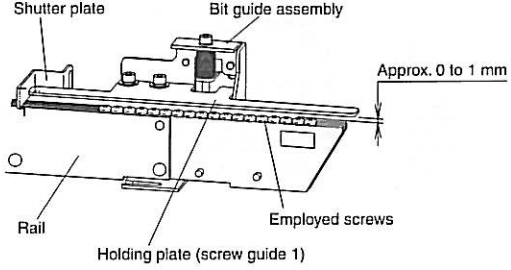

If the holding plate (screw guide 1) height needs to be adjusted, proceed as directed below.

Tilt the Quicher or operate it so that the screws are shifted to the escaper section. If there is no clearance between the holding plate (screw guide 1) and screw heads, the screws cannot move. The screws can move while the shutter is open with an adequate clearance provided between the holding plate (screw guide 1) and screw heads.

If the screws do not move to the escaper section, loosen the bit guide assembly retaining screw, and rotate the bit guide assembly up-down adjustment screw counterclockwise with the accessory Allen wrench to move the holding plate (screw guide 1) upward. Adjust the holding plate (screw guide 1) height by rotating the bit guide assembly up-down adjustment screw to provide a clearance of 0 to 1 mm between the holding plate (screw guide 1) and the heads of the employed screws.

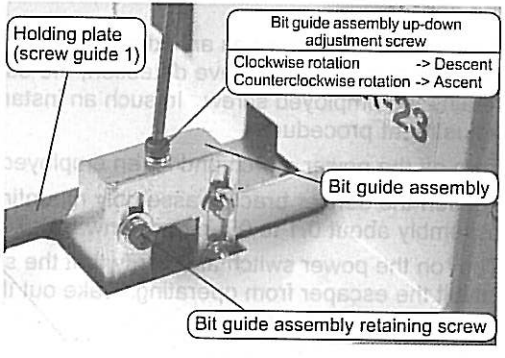

When performing the above adjustment procedure, ensure that the gap between the holding plate (screw guide 1) and rail is uniform. You should particularly make sure that the gap provided for the rear side of the unit is not smaller than the front one.

After completion of adjustments, be sure to tighten the bit guide assembly retaining screw.

If the employed screw has a relatively short shank, fine adjustments are needed. For screws having a relatively long shank, however, coarse adjustments will suffice.

4-5 Checking and Adjusting the Rail Assembly and Escaper Components

The Quicher is factory adjusted for pan-head screws prior to shipment. Under normal conditions, you do not have to readjust the rail assembly or escaper components.

However, if the employed screws have an extremely thin head or a smaller diameter, it may be necessary to perform a check/adjustment procedure. To check or adjust the rail assembly and escaper components, you have to remove the four mounting screws to take off the escaper cover.

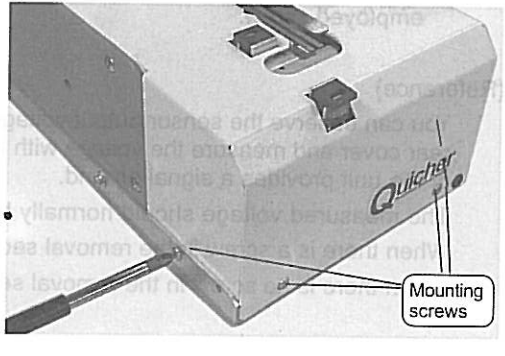

NOTE: After the rail has been removed for cleaning or the rail or escaper has been replaced for a change in the employed screw size, be sure to adjust the escaper components and rail assembly. The replacement procedures are detailed in Section 6-3, Replacement Procedures.

When the employed screws move along the rail, the escaper receives one of them and moves it to the screw removal section (sensor optical axis). In this state, the employed screw is retained in the removable position. The employed screw can be removed only when the escaper is positioned as shown at right. When you remove the screw from outside, the escaper operates to receive the next screw and retains it in the removable position. When there is no screw in the removable position, the escaper continues its reciprocating motion. The escaper operation is controlled by the sensor.

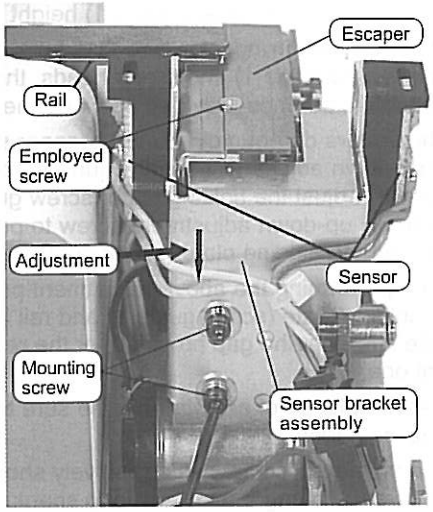

If the employed screw has an extremely thin head, the sensor may fail to detect it. If the sensor does not achieve detection, the escaper does not stop running even if it retains the employed screw. In such an instance, you have to complete the following adjustment procedure.

Turn off the power switch and let an employed screw be retained by the escaper.

Loosen the sensor bracket assembly mounting screw and shift the sensor bracket assembly about 0.1 to 0.5 mm downward. Turn the mounting screw finger-tight.

Turn on the power switch and verify that the sensor detects the employed screw to inhibit the escaper from operating. Take out the retained employed screw and verify that the escaper operates.

After completion of checkout, fully tighten the mounting screw.

NOTE: If you lower the sensor bracket assembly to excess, the sensor actuates to inhibit the escaper from operating even when the escaper does not retain an employed screw.

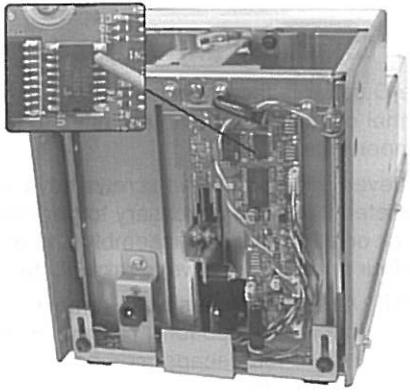

(Reference)

You can observe the sensor output voltage level when you remove the main body rear cover and measure the voltage with the pin 7 . Note that the metal portion of the unit provides a signal ground.

The measured voltage should normally be as follows:

When there is a screw in the removal section: 3 V or higher

When there is no screw in the removal section: 1.5 V or lower

If the escaper operates in such a manner that the employed screws are not readily retained by the escaper, perform the following check/adjustment procedure.

- Check that the clearance between the rail and escaper is properly adjusted. The clearance should ideally be as small as possible. Fine adjustments are needed particularly when the employed screws have a small diameter.

  Adjustment procedure:

  Adjust the rail assembly mounting position (front-rear adjustment).

  NOTE 1: Make adjustments so that the rail end does not come into contact with the escaper when the rail vibrates.

  NOTE 2: After adjustments, be sure to tighten the rail front-rear position lock screw.

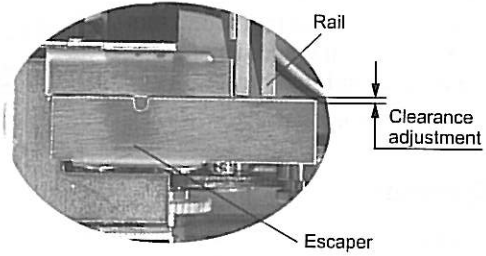

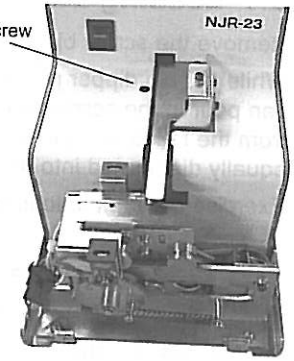

- Check that the rail groove is in alignment with the escaper groove. When the escaper moves to receive an employed screw from the rail, it is ideal that the rail groove is in alignment with the escaper groove. Fine adjustments are needed particularly when the employed screw diameter is small.

  Adjustment procedure

  Adjust the rail bracket stopper mounting position (left-right adjustment).

  NOTE: After adjustments, be sure to tighten the mounting screw.

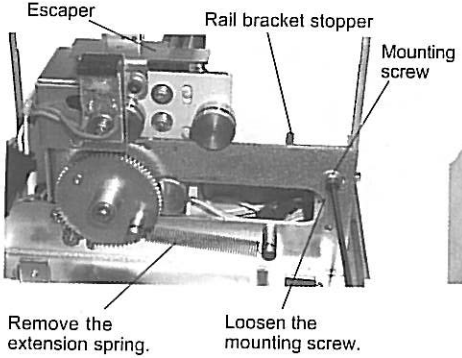

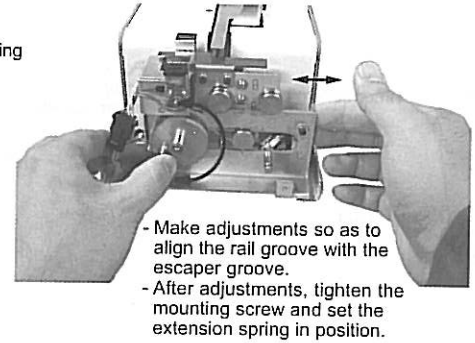

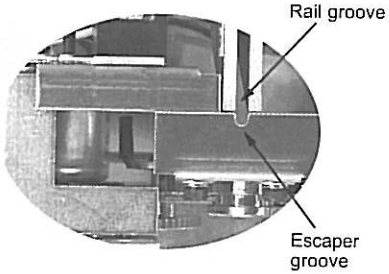

5. Operating Procedures and Operational Checks

5-1 Loading the Screws

Remove the screw bin lid.

While the bin dipper plates are at the lowest position, you can pour in the screws until they are piled up to about 3 mm from the rail upper surface. Ensure that the screws are equally distributed into the right- and left-hand bins.

Exercise care not to load the screws to excess.

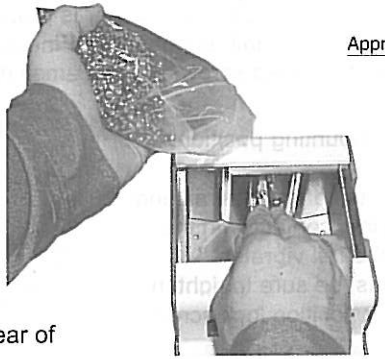

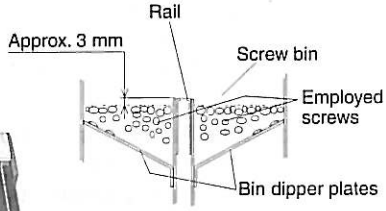

5-2. Operating the Quicher

Connect the accessory AC adapter plug to the DC jack on the rear of the Quicher. Connect the AC adapter to a power outlet.

Turn on the Quicher power switch. The lamp incorporated in the power switch then comes on.

Turning on the power switch causes the drive motor to rotate normally, the bin dipper plates to move up and down, and the rail to vibrate. The escaper reciprocates at the same time. After a while, the loaded screws are sequentially transported along the rail groove and delivered to the escaper. The escaper picks a screw and retains it in the removable position. If you do not remove the screw from the removable position for a predetermined period of time, the Quicher comes to a stop. The moment the screw is removed, the Quicher resumes operation.

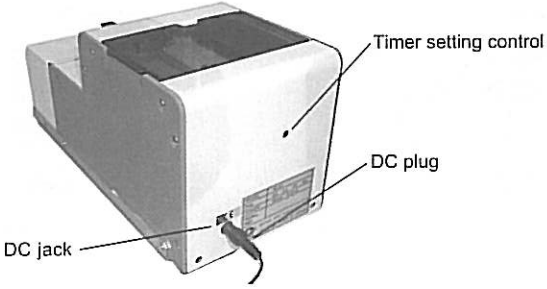

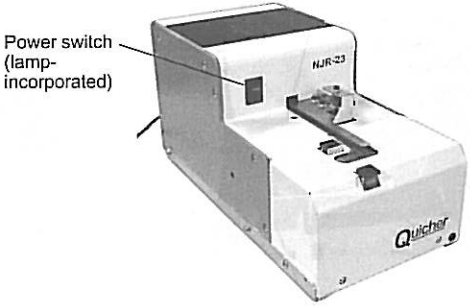

Operational features

The Quicher is equipped with an overload protection circuit.

If a movable section is overloaded during a Quicher operation due, for instance, to a trapped screw or other article or excessive screw introduction into the screw bins, the overload protection circuit actuates.

Function descriptions and remedies

Under normal conditions, the drive motor in the Quicher rotates in normal direction to feed the loaded screws continuously to the escaper section, thereby allowing you to obtain the screws successively. However, if any movable section is overloaded, the drive motor rotates in reverse direction for a predetermined period of time and then resumes its normal rotation. When the cause of the movable section overload is eliminated upon motor reversal, the motor reverts to normal rotation, permitting you to obtain the screws continuously.

If the cause of the movable section overload is not eliminated upon motor reversal, the overload protection circuit performs the reverse rotation and normal rotation repetition cycle for a predetermined period of time and then shuts off the power supply to the drive motor. In this instance, however, the escaper continues operating.

When the power to the drive motor shuts off as above, turn off the power switch and then eliminate the cause of the overload. If, for instance, the screw bins are overloaded with screws, reduce the number of screws in the bins. If a screw or other article is trapped in a movable section, remove it.

After the cause of the overload is eliminated, turn the power switch back on (power-on reset) and use the Quicher.

The Quicher is equipped with a timer.

You can adjust the timer setting as appropriate for the employed screw type.

Function descriptions

The screw feed speed varies with the employed screw type.

The Quicher continues running while there is no screw in the screw removal area of the escaper section. It stops its operation when a predetermined period of time elapses after a screw is retained in the removal section. This duration of time can be adjusted with the timer setting control on the rear of the Quicher.

It is recommended that you decrease the timer setting when the feed speed for the employed screw type is high and increase the setting when the feed speed is low.

When adjusting the timer setting, exercise care not to rotate the control beyond the permissible range.

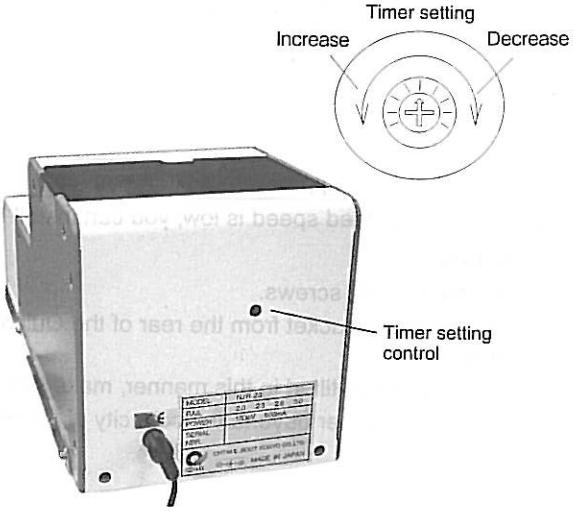

The Quicher is equipped with an external output signal cable.

The incorporated signal cable enables you to obtain a signal that indicates whether a screw is present in the escaper section screw removal area.

Descriptions

The signal cable is positioned inside the main body. To use it, draw it out of the grommet that is provided for the escaper cover.

Violet wire --- Signal wire (off when there is no screw in the escaper screw removal area or on when a screw is present)

Gray wire --- Common wire

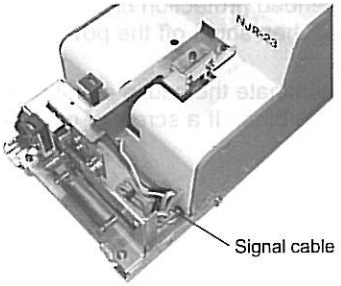

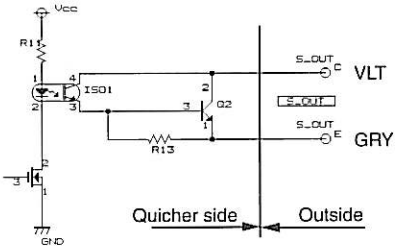

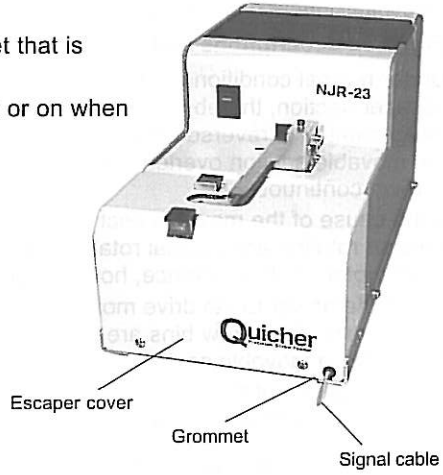

The Quicher is equipped with a tilt mechanism.

When the screw feed speed is low, you can install the Quicher in a tilted position.

Descriptions

Loosen the tilt lock screws.

Pull out the base bracket from the rear of the Quicher and fix it in an appropriate position.

After the Quicher is tilted in this manner, make sure that it is steady.

Do not tilt the Quicher beyond the capacity of the tilt mechanism.

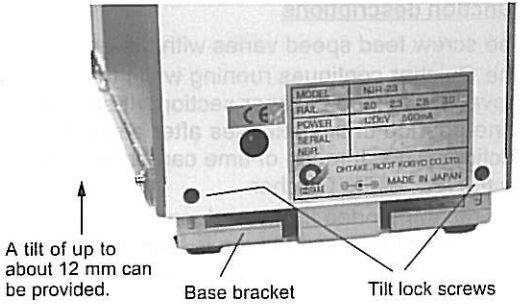

6. Maintenance

CAUTION Before performing any maintenance, turn off the power switch and remove all the loaded screws from the Quicher.

6-1 Cleaning the Rail and Rail Guide Wall Surface

When the rail groove is soiled, the screw feed speed may lower. If such a situation is encountered, wipe the rail groove clean with a thin, clean cloth moistened with alcohol.

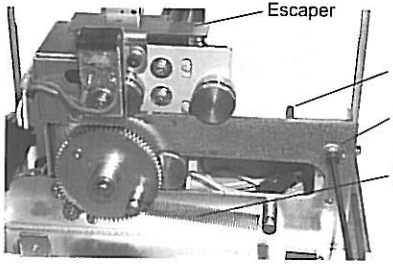

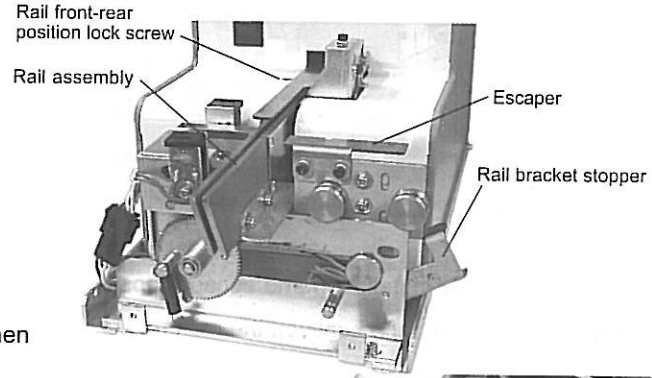

If the rail groove is heavily soiled, remove the rail assembly and then perform cleaning.

Remove the escaper cover.

Remove the extension spring.

Remove the rail bracket stopper mounting screw.

Rotate the rail bracket stopper to move the escaper to the right.

Loosen the rail front-rear position lock screw and then pull the rail assembly forward and out.

With a thin, clean cloth moistened with alcohol, wipe clean the rail groove and upper and lateral surfaces of the removed rail assembly.

With a thin, clean cloth moistened with alcohol, wipe clean the rail guide wall surface, which is revealed upon rail assembly removal.

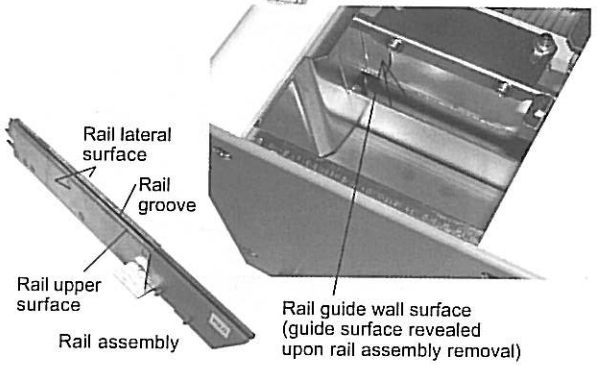

6-2 Installing the Rail Assembly and Escaper Components

After cleaning, achieve rail section reassembly by reversing the rail assembly removal procedure.
Be sure to lodge the escaper drive gear pin in the escaper rail groove.

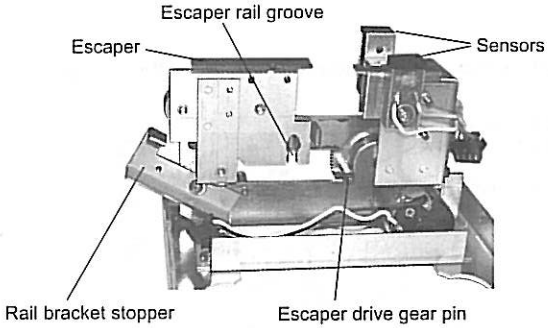

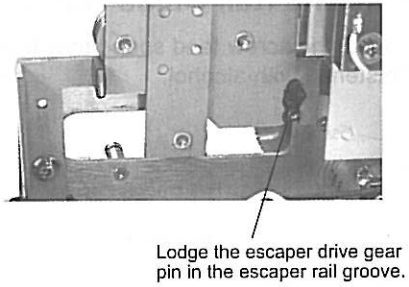

Complete rail assembly installation and escaper position adjustments as indicated on page 9.

- Adjusting the clearance between the rail and escaper

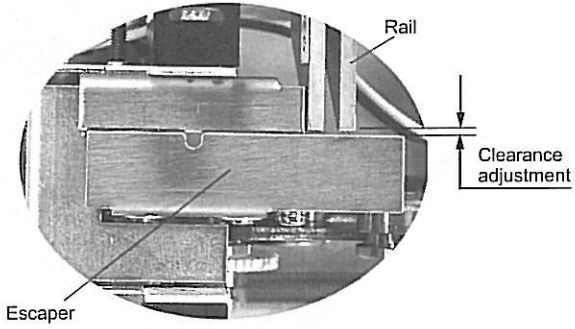

- Aligning the rail groove and escaper groove

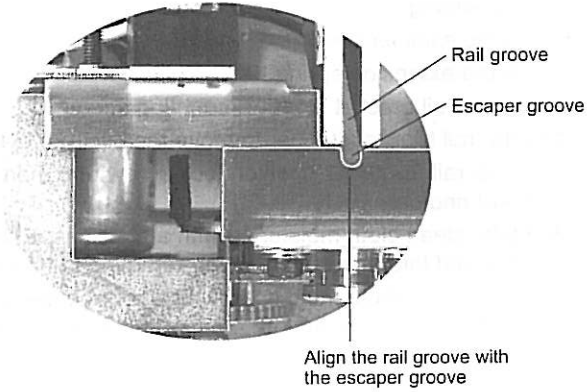

6-3 Replacement Procedures

- Replacing the rail assembly

  The rail assembly of the Quicher can easily be replaced.

  If the loaded screws do not smoothly feed after cleaning or if you intend to use a different screw diameter, replace the rail assembly.

  For the replacement procedure, see the earlier section on cleaning.

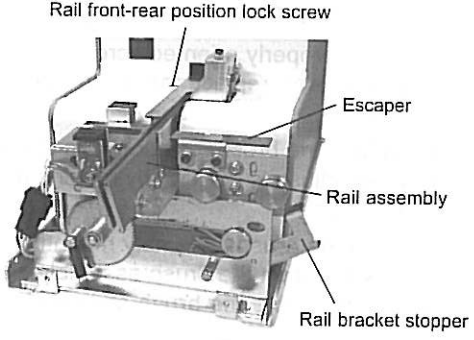

- Replacing the passage plate and escaper

  The Quicher allows you to change the screw diameter setup by replacing some components.

  (this change can be made even if you do not change the Quicher type).

  To change the screw diameter, you have to replace the passage plate and escaper in addition to the rail assembly.

  To replace the passage plate, remove its retaining screw.

  Replace the passage plate in such a manner that the brush is positioned as shown at right.

  Exercise care not to lose the retaining screw.

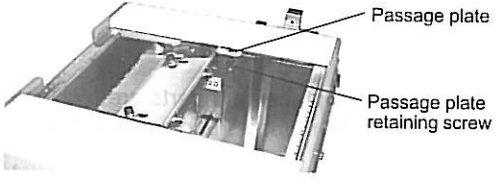

To replace the escaper, you have to remove its mounting screws.

Remove the extension spring, shift the escaper to the right as shown at right, remove the mounting screws, and replace the escaper.

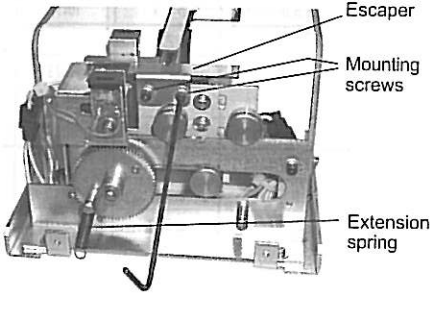

After the rail assembly and escaper have been replaced, it is necessary to adjust the escape section.

The adjustment procedure is indicated on pages 17 and beyond.

- Replacing the brush

  If the ends of the brush bristles are worn so that improperly oriented screws cannot be swept away, replace the brush with a new one.

  To replace the brush, position it as shown. You can adjust its position by rotating the timing shaft.

  Remove the brush assembly mounting screws and then the brush assembly. You can disassemble the brush assembly.

  After the brush is replaced, install the brush assembly by reversing the preceding steps.

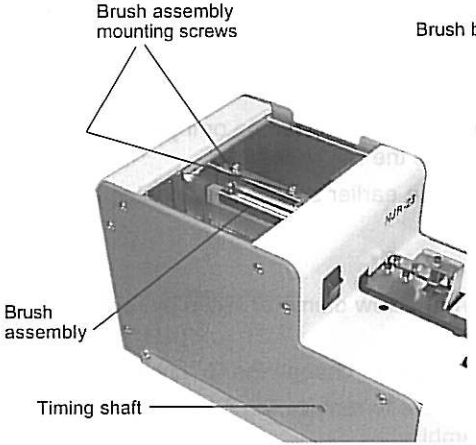

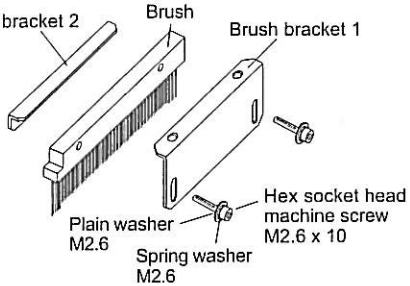

Brush assembly exploded view

All the above replacement parts are available as options. When they need replacement, contact your local dealer and specify the machine model number, part names, and part model numbers.

Main body type	Main body model number	Screw nominal diameter	Rail model number	Escaper model number	Passage plate model number	Brush model number
NJR12	NJR1214	φ1.4	RR14	E14	W1217	H1217
	NJR1217	φ1.7	RR17	E17		
NJR23	NJR2320	φ2.0	RR20	E20	W2320	H2330
	NJR2323	φ2.3	RR23	E23	W2323	
	NJR2326	φ2.6	RR26	E26	W2326	
	NJR2330	φ3.0	RR30	E30	W2330	
NJR45	NJR4535	φ3.5	RR35	E35	W4540	
	NJR4540	φ4.0	RR40	E40		
	NJR4550	φ5.0	RR50	E50	W4550	

NOTE 1: You can change the machine model without changing the machine type.

NOTE 2: To change the screw size (nominal diameter), replace all the parts indicated at left.

NOTE 3: The replacement rails, escapers, passage plates, and brushes are available as options.

Adjustments to be made after rail assembly/escaper replacement

① Adjust the clearance between the rail assembly and escaper. ---> Adjust the rail assembly mounting position (front-rear adjustment).

The clearance should be minimized. Fine adjustments are needed particularly when the employed screws have a small diameter. For the adjustment procedure, see page 9.

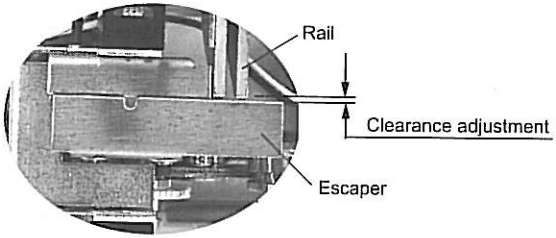

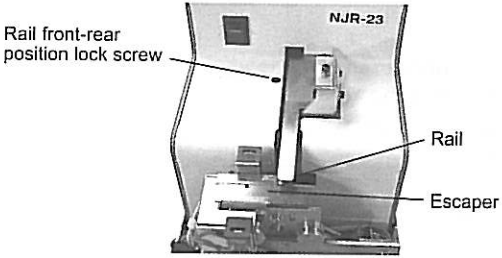

② Adjust the escaper height relative to the rail. ---> Adjust the escaper mounting position (height adjustment).

Ensure that the height deviation of the escaper upper surface from the rail upper surface is 0 to -0.3 mm or so. Also, be sure that the escaper is placed in a horizontal position. Fine adjustments need to be made to reduce the height difference to about 0 mm particularly when a small screw diameter is employed.

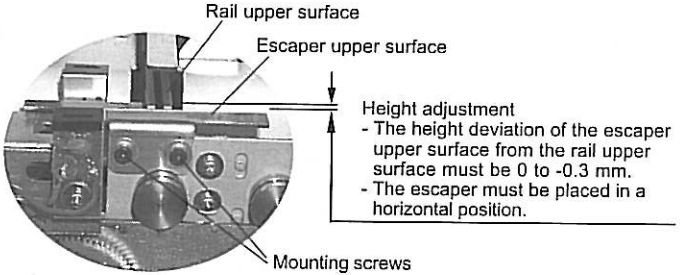

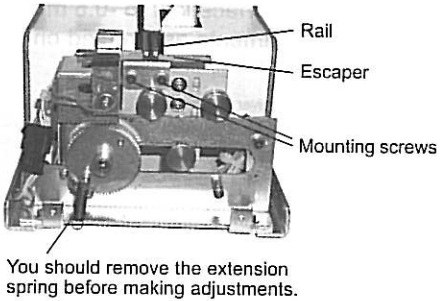

③ Adjust the clearance between the rail lateral surface and escaper screw receiver. ---> Adjust the escaper screw receiver mounting position (left-right adjustment).
Position the escaper screw receiver so that a clearance of about 0.1 to 0.3 mm is provided between the rail lateral surface and escaper screw receiver. Fine adjustments need to be made to reduce the clearance particularly when a small screw diameter is employed.
Accomplish vertical positioning by pressing the escaper screw receiver end face against the half-blanked portion of the sensor bracket.

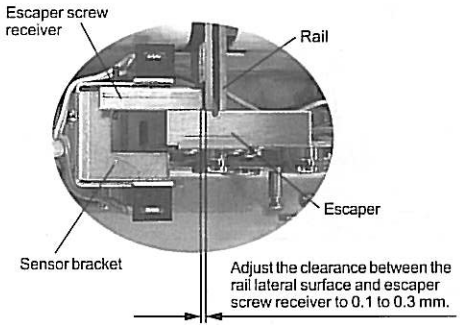

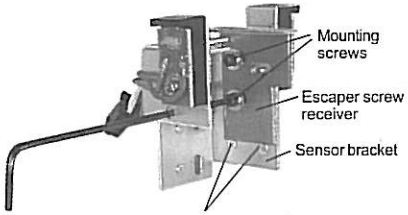

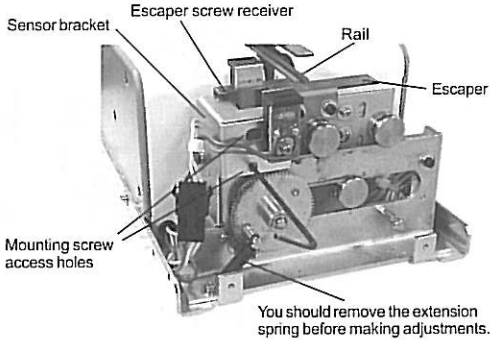

④ Adjust the height relationship between the escaper screw receiver upper surface and escaper upper surface. ---> Adjust the sensor bracket assembly mounting position (height adjustment).
Position the sensor bracket assembly so that the height deviation of the escaper screw receiver upper surface from the escaper upper surface is 0 to -0.5 mm or so. The escaper screw receiver adjusted in step ③ must not be repositioned here. Make fine adjustments as directed on pages 7 and 8 when the employed screw has an extremely thin head or small diameter.

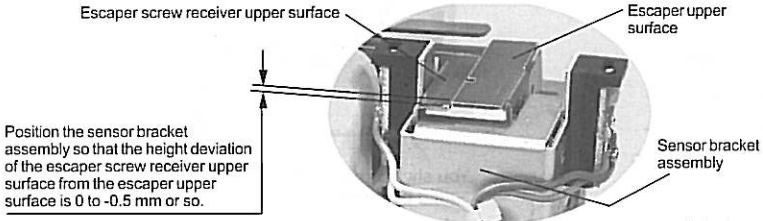

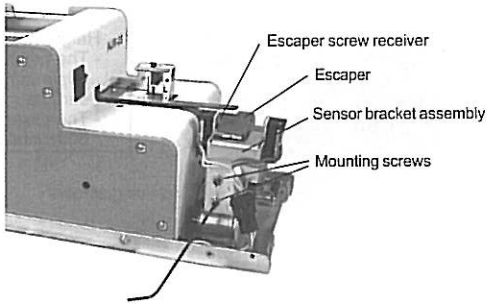

⑤ Adjust the positional relationship between the rail groove and escaper groove. ---> Adjust the rail bracket stopper mounting position (left-right adjustment).

Position the rail bracket stopper so that the escaper groove is aligned with the rail groove when the escaper moves to receive a screw from the rail. Fine adjustments need to be made particularly when the employed screw diameter is small. For the adjustment procedure, see page 9.

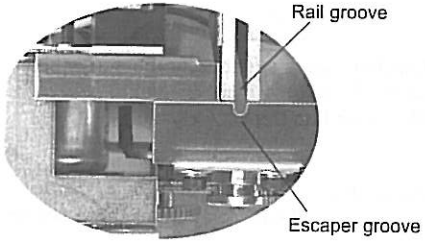

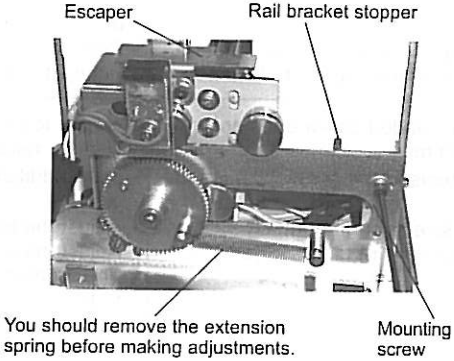

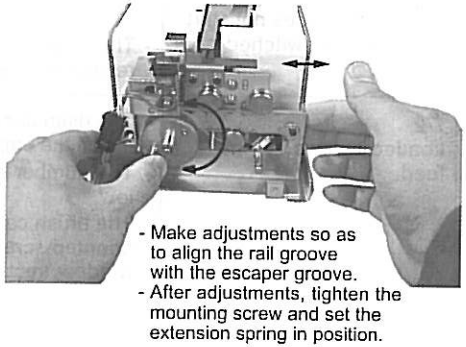

After rail assembly and escaper replacement, be sure to perform steps ① through ⑤ above for readjustment purposes.

After completion of adjustments, operate the Quicher to perform the following operational checks.

- Check that screws are smoothly delivered from the rail to the escaper.
- Check that the sensor detects a screw in the removal section and brings the escaper to a stop. Also, check that the escaper resumes operation when the screw is removed.

If any improper operation is encountered, perform adjustment steps ① through ⑤ again.

7. Troubleshooting Guide

CAUTION Before taking any remedial action, turn OFF the power switch.

Problem	Cause	Remedy
7-1 The Quicher does not start when power switched on.	- No power is supplied. - The screw in the removal section has not been removed for a predetermined period of time.	- Ensure that the AC adapter is properly connected to a power source. - Remove the screw from the removal section. Adjust the timer setting control.
7-2 Loaded screws do not feed.	- The diameter of the loaded screw does not match the employed rail. - The number of screws in the screw bins is too low. - The brush cannot sweep an abnormally oriented screw away from the passage window section. - A screw shank has been trapped in the passage window. - An abnormally oriented screw is stuck in the rail section. - The rail does not vibrate (a screw or foreign object is trapped in a gap). - The timer setting control is improperly adjusted.	- Switch to the Quicher that is suitable for the screw size. Use the rail that fits the screw. - Load additional screws into the screw bins. - Adjust the brush. Adjust the passage plate. The problem may also be cleared by adding some screws to the screw bins. - Remove any abnormally oriented screw and then adjust the passage plate. - Remove the abnormally oriented screw as indicated below. Loosen the bit guide assembly retaining screw, shift the holding plate (screw guide 1) upward, and remove the abnormally oriented screw. After screw removal, readjust the holding plate (screw guide 1). - Remove the trapped screw or foreign matter. - Adjust the timer setting control.
7-3 A loaded screw has become lodged in the rail groove.	- The diameter of the loaded screw does not match the employed rail. - The total length of the loaded screw is less than the rail groove width.	- Switch to the Quicher that is suitable for the screw size. Use the rail that fits the screw. - This problem cannot be remedied.

Problem	Cause	Remedy
7-4 The screws on the rail do not feed smoothly.	- The clearance between the holding plate (screw guide 1) and screw heads is insufficient. - Dirt, oil, or grease is attached to the rail. - The rail fails to vibrate due to a screw or foreign object trapped in a gap.	- Shift the holding plate (screw guide 1) upward. Use the Quicher in a tilted position. Adjust the timer setting control. - Clean the rail and rail guide. - Remove the trapped screw or foreign object and then clean the rail and rail guide.
7-5 Abnormally oriented screws are occasionally allowed to travel through the passage window. A screw shank readily lodges in the passage window.	- The passage plate is improperly adjusted. - The employed passage plate does not match the loaded screw. - The forward-descending tilt of the Quicher is above the permissible limit.	- Readjust the passage plate. - Use the passage plate that matches the loaded screw. - Ensure that the forward-descending tilt is within the permissible limit.
7-6 Screws are not transported to the removal section.	- Screws are stopped in the middle of the rail section. - Screws are not smoothly transferred from the rail to the escaper.	- Readjust the holding plate (screw guide 1). - Readjust the positional relationship between the rail end and escaper.
7-7 The Quicher comes to a sudden stop.	- The overload protection circuit is activated due to overloading. - The screw in the removal section has not been removed for a predetermined period of time.	- Turn the power switch off and then back on. If the operation comes to a stop again, the probable causes are: There are too many screws in the screw bin. --> Adjust the number of screws in the screw bins. A screw or foreign object is trapped in a movable section. --> Remove any trapped screw or foreign object. - Remove the screw.

Problem	Cause	Remedy
7-8 The bin dipper plates fail to stop moving when there is a screw in the removal section.	- The timer setting control is improperly adjusted.	- Readjust the timer setting control.
7-9 The escaper plates fail to stop running when there is a screw in the removal section.	- The screw is not detected by the sensor in the escaper section.	- Readjust the sensor bracket assembly.
7-10 Screws have been dislocated and dropped inside the Quicher housing.	- The holding plate (screw guide 1) is improperly adjusted. - The front-rear position of the rail is improperly adjusted.	- Readjust the holding plate (screw guide 1). - Readjust the front-rear position of the rail.

8. Main Specifications

Type	Model number	Screw nominal diameter	Rail number	Escaper number	Passage plate number	Brush number
NJR12	NJR1214	φ1.4	RR14	E14	W1217	H1217
	NJR1217	φ1.7	RR17	E17		
NJR23	NJR2320	φ2.0	RR20	E20	W2320	H2330
	NJR2323	φ2.3	RR23	E23	W2323	
	NJR2326	φ2.6	RR26	E26	W2326	
	NJR2330	φ3.0	RR30	E30	W2330	
NJR45	NJR4535	φ3.5	RR35	E35	W4540	
	NJR4540	φ4.0	RR40	E40		
	NJR4550	φ5.0	RR50	E50	W4550	

Applicable screw reference table

Rail groove width (mm) Reference dimension	Applicable screw length range (mm)	Screw head shape						
		Pan head			Bind	Truss	Flat	Hex washer attached
		Sems	Double sems	Washer head				
1.5 ~ 1.7	2.0 ~ 10	–	–	–	–	–	○	–
1.8 ~ 2.0	2.3 ~ 10	–	–	–	–	–	○	–
2.1 ~ 2.4	2.6 ~ 18	○	○	○	○	○	○	○
2.4 ~ 2.7	2.9 ~ 18	○	○	○	○	○	○	○
2.7 ~ 3.0	3.2 ~ 18	○	○	○	○	○	○	○
3.1 ~ 3.4	3.6 ~ 18	○	○	○	○	○	○	○
3.7 ~ 4.0	4.1 ~ 18	○	○	○	○	○	○	○
4.1 ~ 4.4	4.6 ~ 18	○	○	○	○	○	○	○
5.1 ~ 5.4	5.6 ~ 18	○	○	○	○	○	○	○

Power requirements	AC adapter input : AC100V 50/60Hz Main body internal : DC12V 500mA
Dimensions	134W × 274D × 136H (mm)
Weight	Approx. 4.2 kgf

NOTES

- Measure the shank diameter of the screw to be used and then check whether it matches the rail groove reference dimension.
- You can change the model without changing the type.
- To change the screw size (nominal diameter), replace all the associated replacement parts.
- The replacement rails, escapers, passage plates, and brushes are available as options.
- The product design, performance characteristics, and other specifications are subject to change and improvement without prior notice.

9. Warranty

The product is warranted for a period of six months after the date of delivery. If it should become faulty, however, contact your Ohtake/Root Kogyo service representative.

However, the solutions to the following situations will be implemented at a reasonable charge without regard to the warranty period.

- -- Defects caused by misuse.
- -- Defects caused by product modifications or unauthorized repairs.
- -- Defects caused by natural disasters or Acts of God.
- -- Defects caused by a factor external to the product.
- -- Cost of replacement of consumable parts (brush and motor) and replacement parts (brush, rail assembly, passage plate, and escaper) including the cost of such parts.

《 The Second Edition : May 2008,Development G, 》

This instruction manual may not be copied or reproduced, in whole or in part, without the consent of Ohtake/Root Kogyo.

OHTAKE ROOT KOGYO CO., LTD.